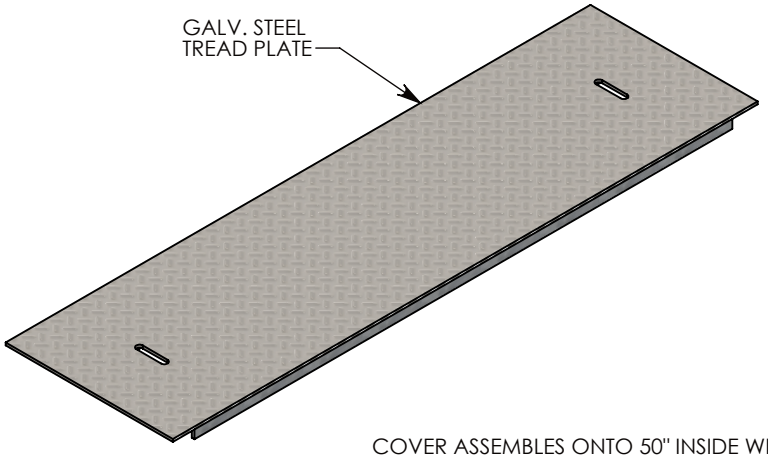

COVER ASSEMBLES ONTO 50" INSIDE WIDTH
PEDESTRIAN RATED CONCAST PT CHANNEL

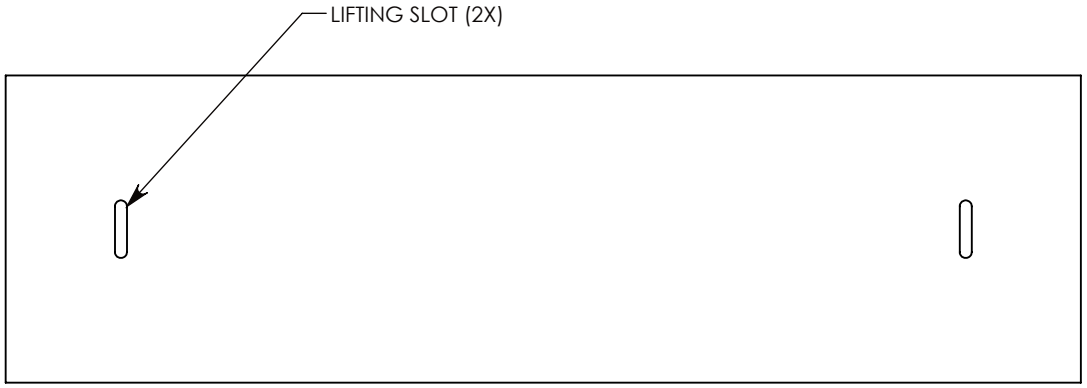

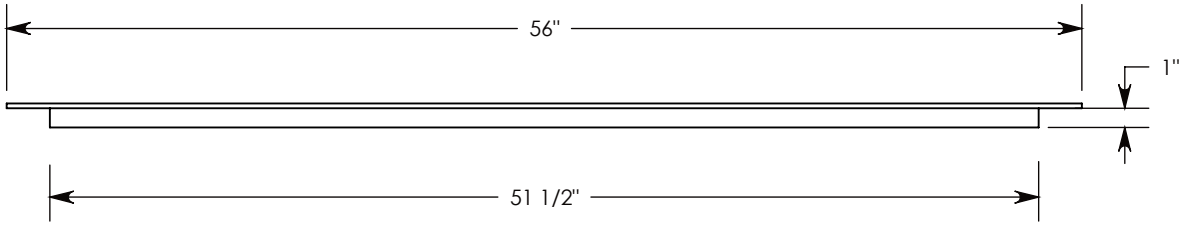

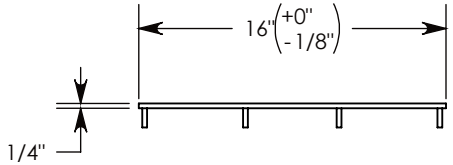

NOTE: FOR NON-STANDARD LENGTHS THE PART NUMBER WILL CORRESPOND TO IT'S MEASURED LENGTH. IE: 8051PTSG 32"

PEDESTRIAN RATED - 200 LB. PER SQ. FOOT

DRAWN BY: ROBIN FLINT		CONCAST 1010 NORTH STAR DRIVE P.O. BOX 69 ZUMBROTA, MN 55992-0069	**DESCRIPTION:** PED RATED STEEL GALV. PT COVER
DATE: 11/6/2015	**REVISION LEVEL:** 0		DIMENSIONS ARE IN INCHES TOLERANCES: FRACTIONAL: ± 1/8" ANGULAR: ± 2°
WEIGHT: 84 LBS.	**MATERIAL:** GALVANIZED STEEL		CONTACT INFORMATION: EMAIL: INFO@CONCASTINC.COM PHONE: (507) 732-4095 FAX: (507) 732-4094
			SHEET 1 OF 1
			PART NUMBER: 8051PTSG