REV. B - SIC - 7/29/2020 - UPDATED ANNOTATIONS; UPDATED WEIGHT RATING NOTE; ADDED SOIL BEARING PRESSURES; 1/4" CABLE CLIP INSERT QTY: 4, WAS QTY: 2

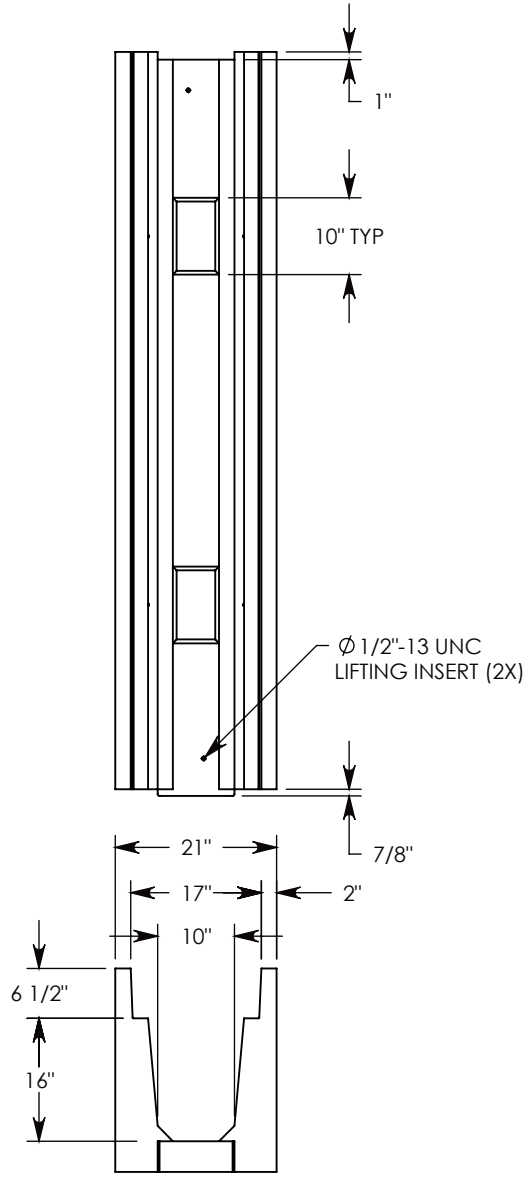

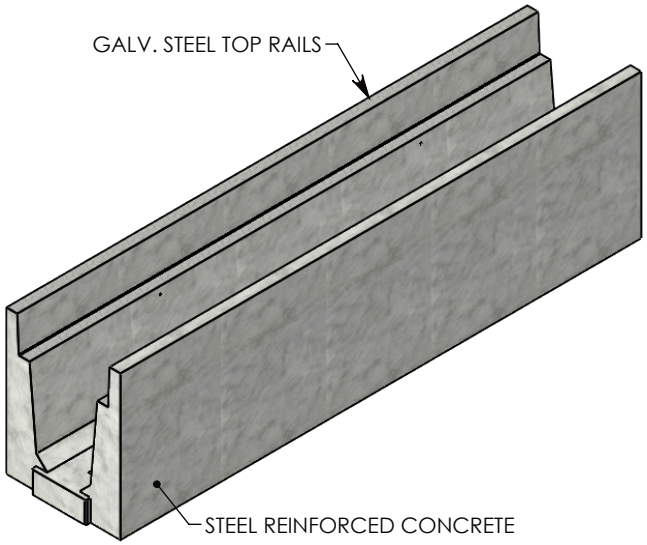

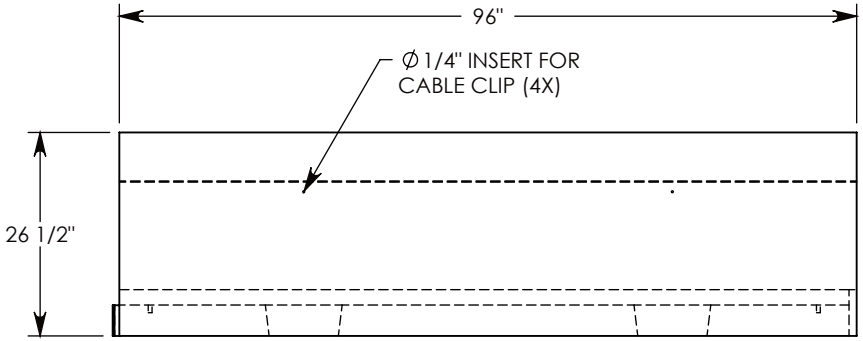

NOTE 1: FOR NON-STANDARD LENGTHS THE CHANNEL WILL BE SOLID BOTTOM AND DESIGNATED WITH ITS CORRESPONDING LENGTH MEASUREMENT. IE: 801016HT 32"

MAX AASHTO H-40 RATED - 64,000 LB. SINGLE AXLE LOAD
DEPENDENT ON TRENCH COVER RATING
MINIMUM ALLOWABLE SOIL BEARING PRESSURE – H-40: 5,500 PSF; H-20: 3,000 PSF

DRAWN BY: ROBIN FLINT			
CREATED DATE: 4/1/2011	**REVISION LEVEL:** B		
SAVED DATE: 7/29/2020	**SAVED BY:** scallahan		
WEIGHT: 2120 LBS.	**MATERIAL:** CONCRETE		

CONCAST
1010 NORTH STAR DRIVE
P.O. BOX 69
ZUMBROTA, MN 55992-0069

DESCRIPTION:
HEAVY TRAFFIC CHANNEL

DIMENSIONS ARE IN INCHES
TOLERANCES:
FRACTIONAL: ± 1/8"
ANGULAR: ± 2°

CONTACT INFORMATION:
EMAIL: INFO@CONCASTINC.COM
PHONE: (507) 732-4095
FAX: (507) 732-4094

SHEET 1 OF 1

PART NUMBER: 881016HT