FIBERCRETE®

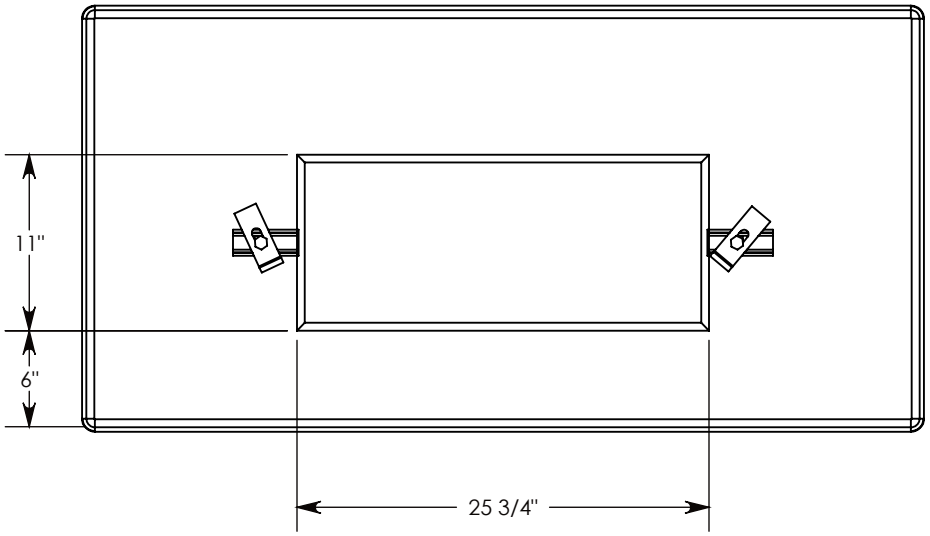

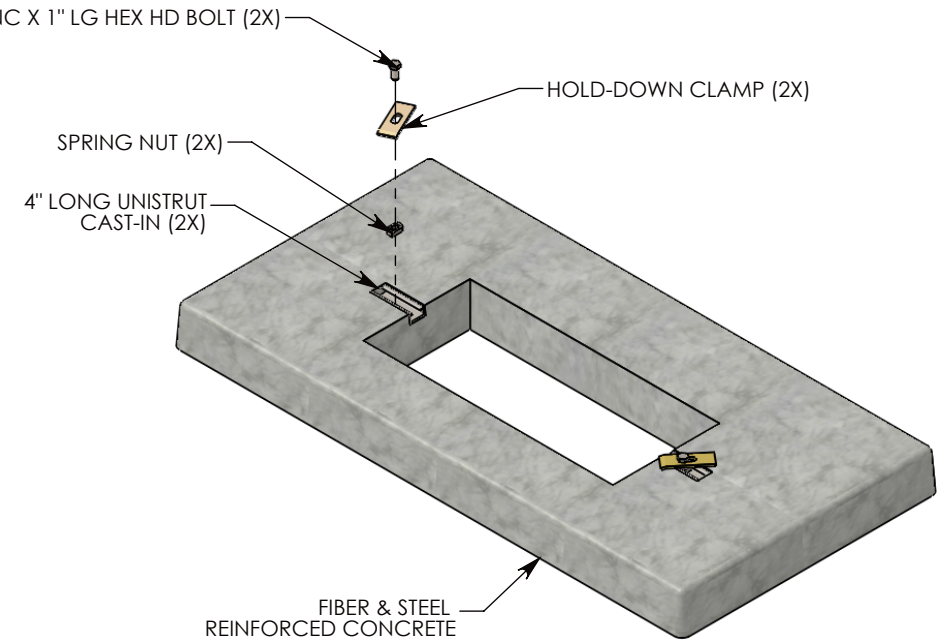

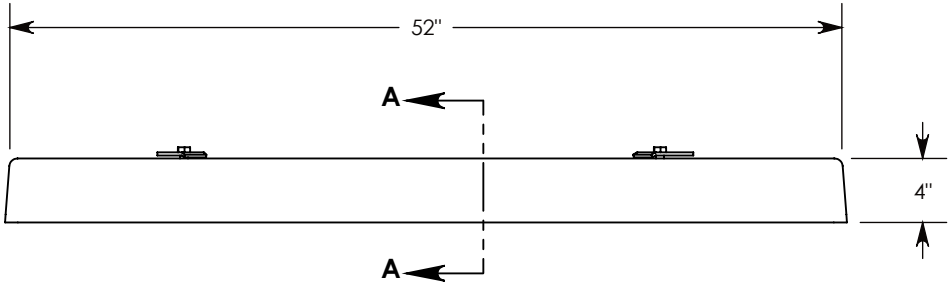

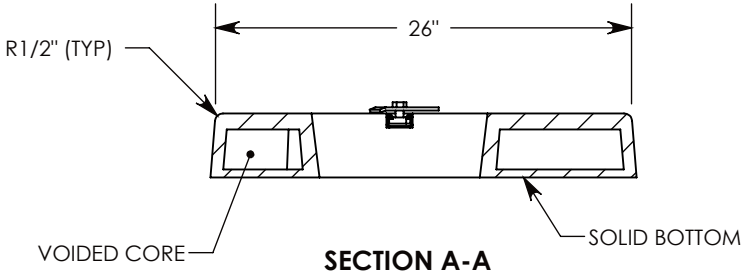

6,000 PSI CONCRETE
ALL VERTICAL SURFACES HAVE A 5 TO 7 DEGREE DRAFT
IF SPECIFIC INSERTS OR MOUNTING HARDWARE ARE REQUIRED, PLEASE SPECIFY WHEN ORDERING.

DRAWN BY: ROBIN FLINT		CONCAST 1010 NORTH STAR DRIVE P.O. BOX 69 ZUMBROTA, MN 55992-0069	**DESCRIPTION:** FIBERCRETE FLAT PAD
DATE: 7/7/2014	**REVISION LEVEL:** 0		DIMENSIONS ARE IN INCHES TOLERANCES: FRACTIONAL: ± 1/8" ANGULAR: ± 2°
WEIGHT: 205 LBS.	**MATERIAL:** CAST FIBERCRETE		CONTACT INFORMATION: EMAIL: INFO@CONCASTINC.COM PHONE: (507) 732-4095 FAX: (507) 732-4094
			SHEET 1 OF 1
			PART NUMBER: FPSB-26-52-4-1126 (6)