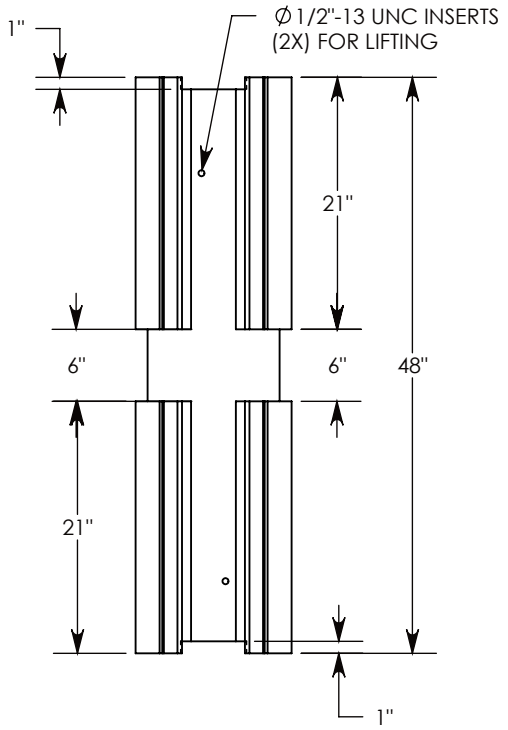

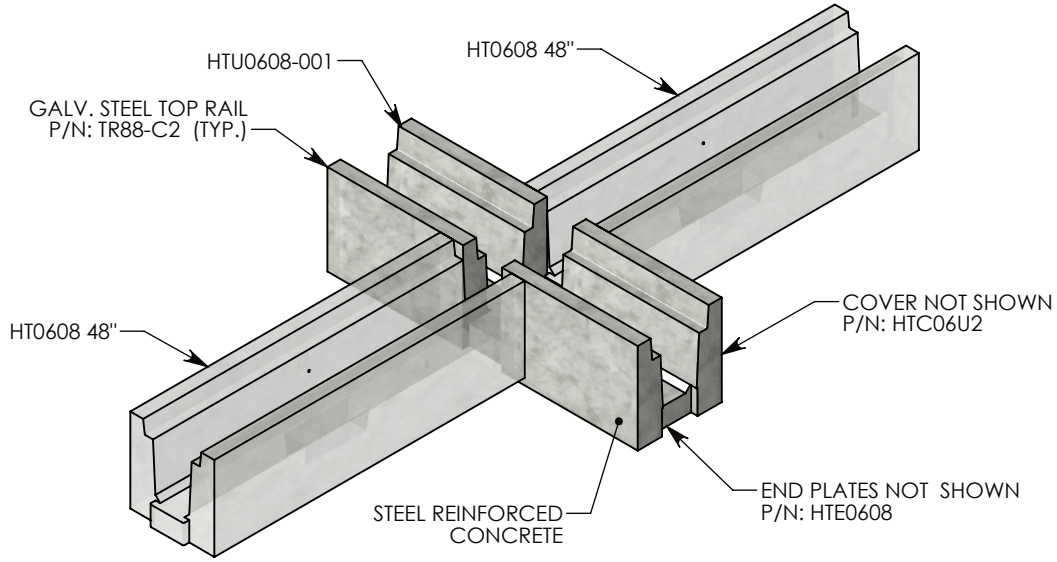

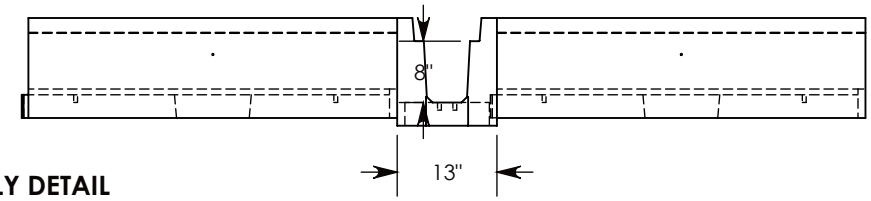

REFERENCE ASSEMBLY DETAIL

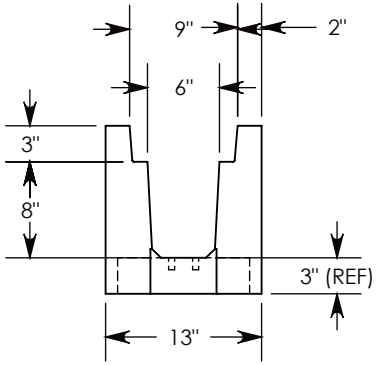

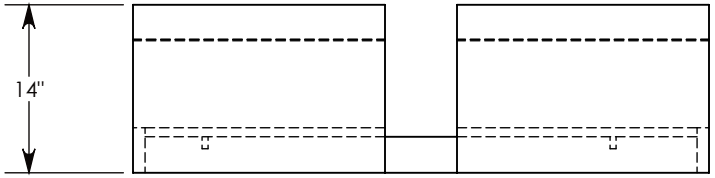

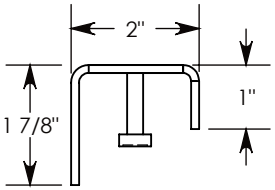

GALV. TOP RAIL DETAIL

H-20 RATED - 32,000 LB. PER AXLE LOAD
H-40 RATED - 64,000 LB. PER AXLE LOAD WHEN USED IN COMBINATION WITH HT340 COVERS

DRAWN BY: ROBIN FLINT		CONCAST 1010 NORTH STAR DRIVE P.O. BOX 69 ZUMBROTA, MN 55992-0069	**DESCRIPTION:** HEAVY TRAFFIC UNIVERSAL CHANNEL
DATE: 12/4/2015	**REVISION LEVEL:** A		DIMENSIONS ARE IN INCHES TOLERANCES: FRACTIONAL: ± 1/8" ANGULAR: ± 2°
WEIGHT: 446 LBS.	**MATERIAL:** CONCRETE		CONTACT INFORMATION: EMAIL: INFO@CONCASTINC.COM PHONE: (507) 732-4095 FAX: (507) 732-4094
			SHEET 1 OF 1
			PART NUMBER: HTU0608-001