REV. B - MKM - 5/29/2018 - UPDATED MODEL & DRAWING
REV. C - SIC - 2/19/2020 - UPDATED DRAWING; UPDATED ALUMINUM COVER WEIGHT, WAS 35 LBS

MARK UP DRAWING BELOW WITH LOCATION AND SIZE OF ANY HOLES, KNOCKOUTS, INSERTS, UNISTRUT, OR ACCESSORIES REQUIRED.

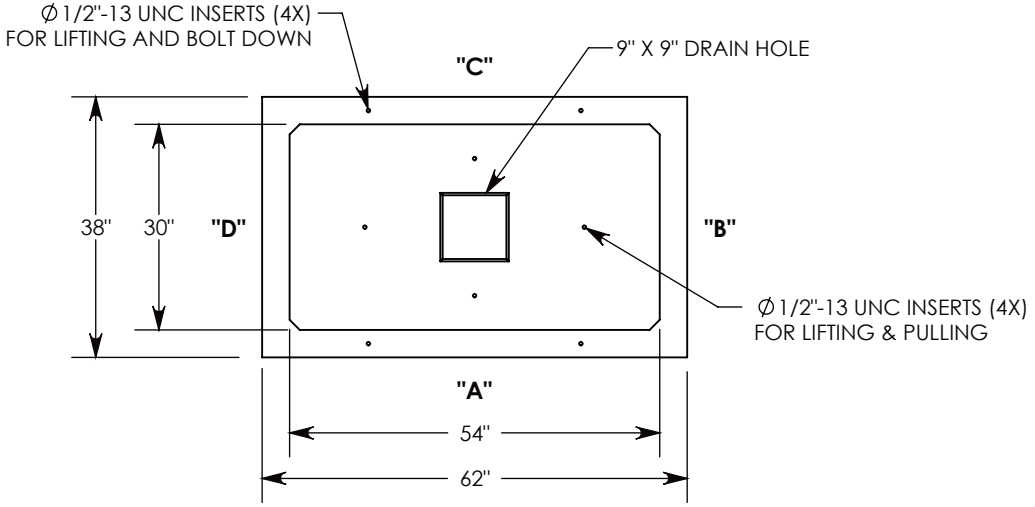

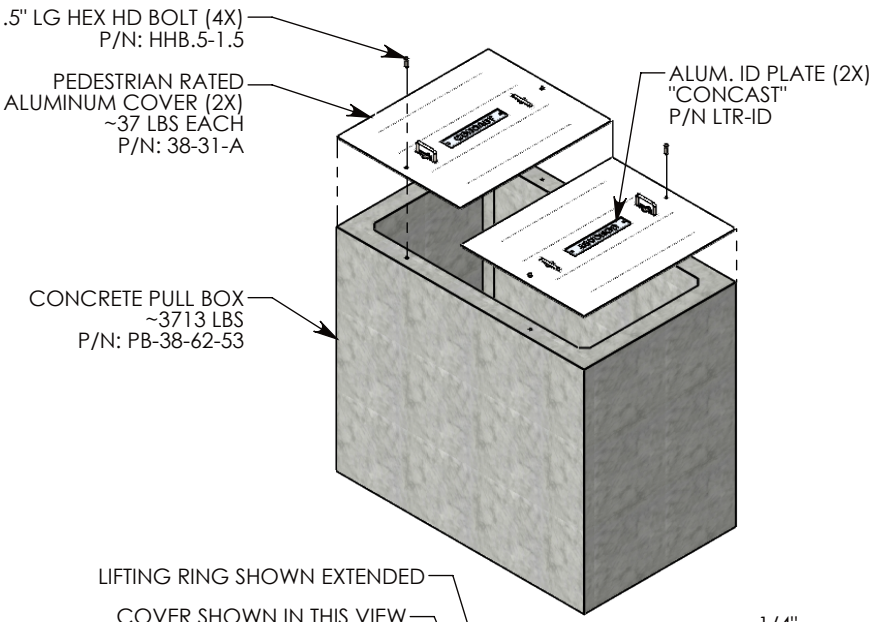

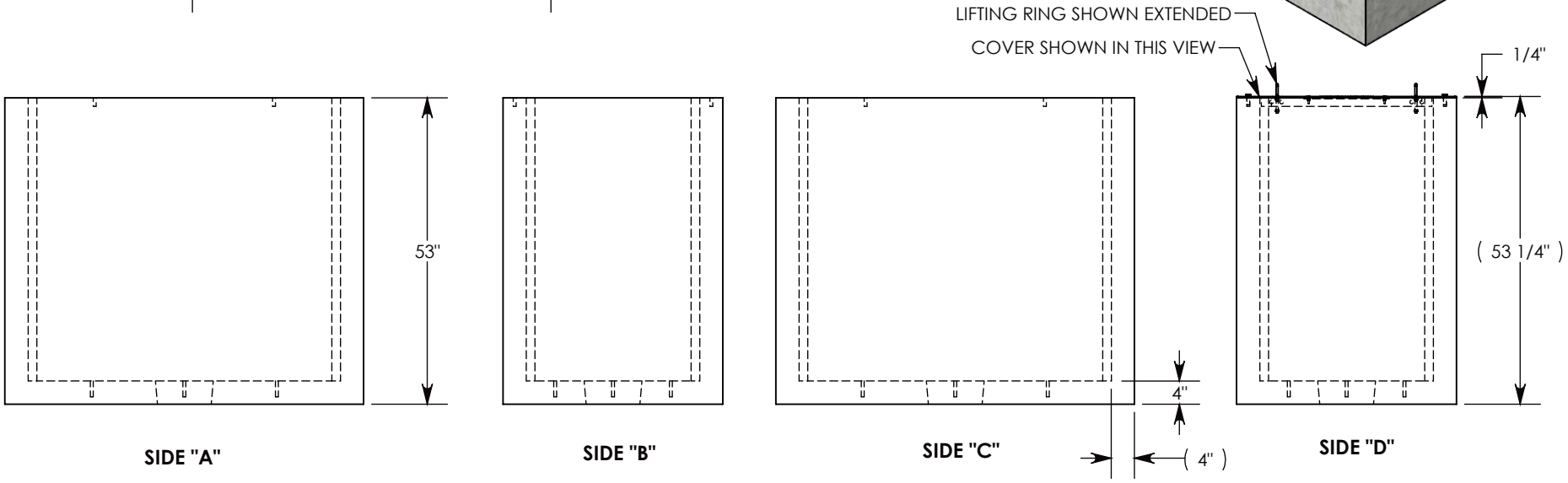

NOTE 1: STANDARD BOX DEPTH OF 53" IS SHOWN. OTHER DEPTHS ARE AVAILABLE UPON REQUEST.
NOTE 2: FOR ADDED SECURITY, PENTA HEAD BOLTS (P/N: PTA.5-1.5) CAN BE ADDED

PEDESTRIAN RATED - 200 LB. PER SQ. FOOT

DRAWN BY:	**ROBIN FLINT**		
CREATED DATE:	**4/16/2010**	**REVISION LEVEL:**	**C**
SAVED DATE:	**2/19/2020**	**SAVED BY:**	**scallahan**
WEIGHT:	**3788 LBS.**	**MATERIAL:**	**NOTED**

CONCAST
1010 NORTH STAR DRIVE
P.O. BOX 69
ZUMBROTA, MN 55992-0069

DESCRIPTION:
CONCRETE PULL BOX W/AL. COVERS

DIMENSIONS ARE IN INCHES
TOLERANCES:
FRACTIONAL: ± 1/8"
ANGULAR: ± 2°

CONTACT INFORMATION:
EMAIL: INFO@CONCASTINC.COM
PHONE: (507) 732-4095
FAX: (507) 732-4094

SHEET 1 OF 1

PART NUMBER:
PB-38-62-53-A