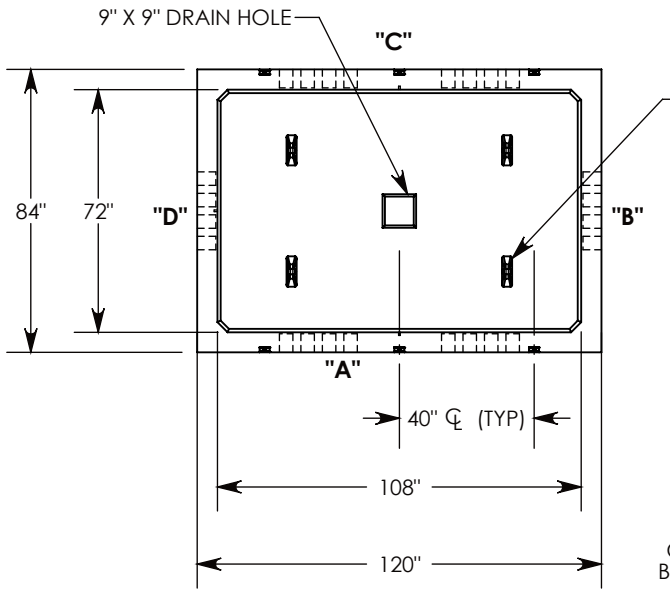

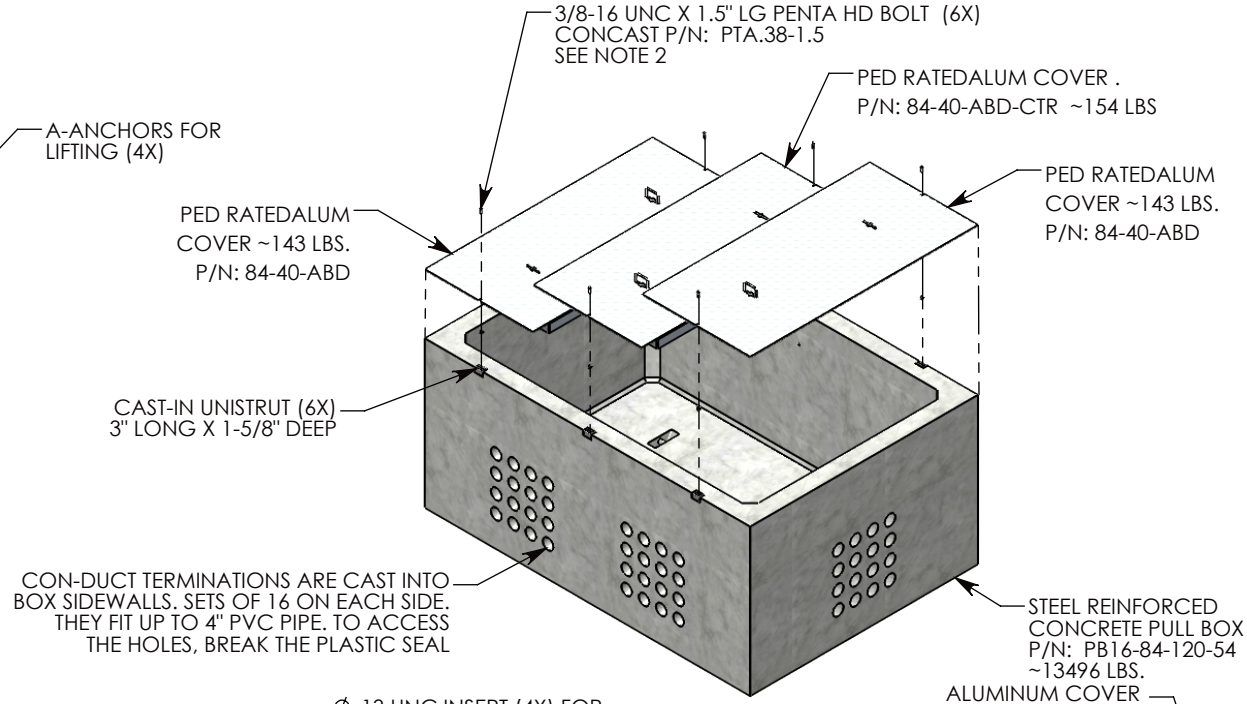

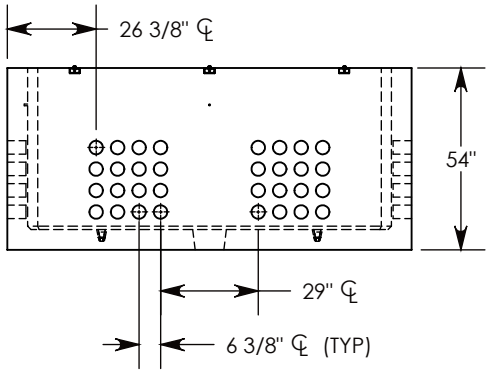

SIDE "A"

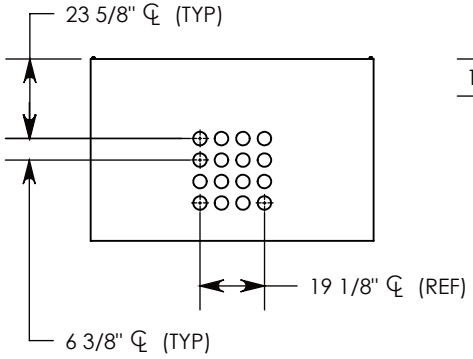

SIDE "B" (HLR)

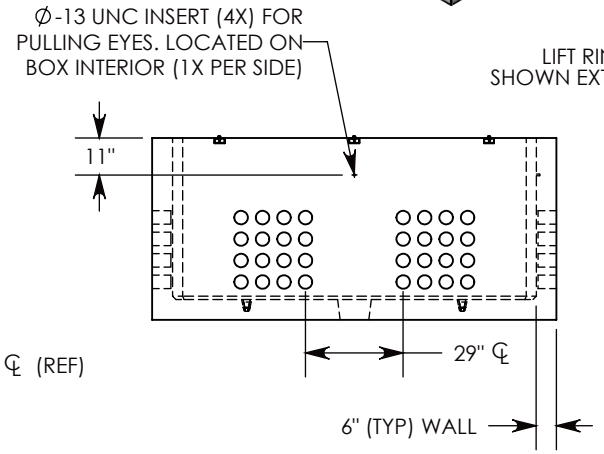

SIDE "C"

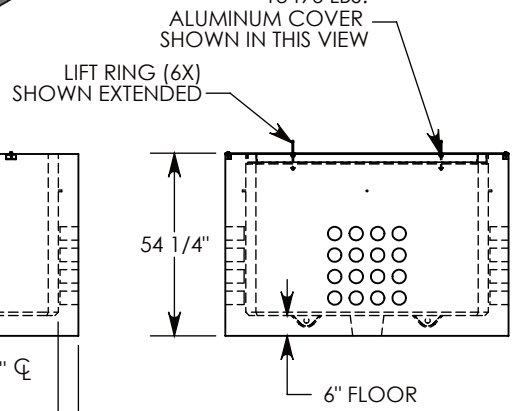

SIDE "D"

NOTE 1: FOR PVC SIZES SMALLER THAN 4", USE CONCAST RC41(REDUCING COUPLER).
NOTE 2: FOR ADDED SECURITY, REPLACE PENTAHEAD BOLTS WITH SURELOCK BOLTS & ORDER UNIT UNDER P/N: PB16-84-120-54-ABDSL

PEDESTRIAN RATED - 200 LB. PER SQ. FOOT

DRAWN BY: ROBIN FLINT		CONCAST 1010 NORTH STAR DRIVE P.O. BOX 69 ZUMBROTA, MN 55992-0069	**DESCRIPTION:** PULL BOX W/ALUM. BOLT-DOWN COVERS
DATE: 4/30/2016	**REVISION LEVEL:** 0		DIMENSIONS ARE IN INCHES TOLERANCES: FRACTIONAL: ± 1/8" ANGULAR: ± 2°
WEIGHT: 13937 LBS. W/COVERS	**MATERIAL:** NOTED		CONTACT INFORMATION: EMAIL: INFO@CONCASTINC.COM PHONE: (507) 732-4095 FAX: (507) 732-4094
			SHEET 1 OF 1
			PART NUMBER: PB16-84-120-54-ABD