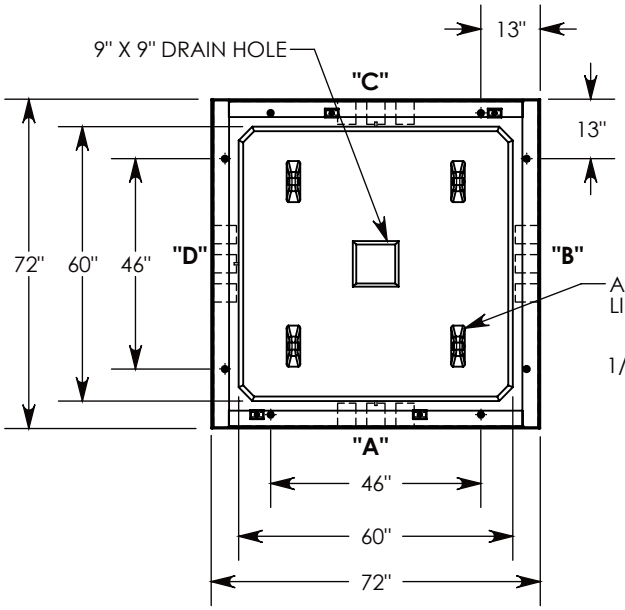

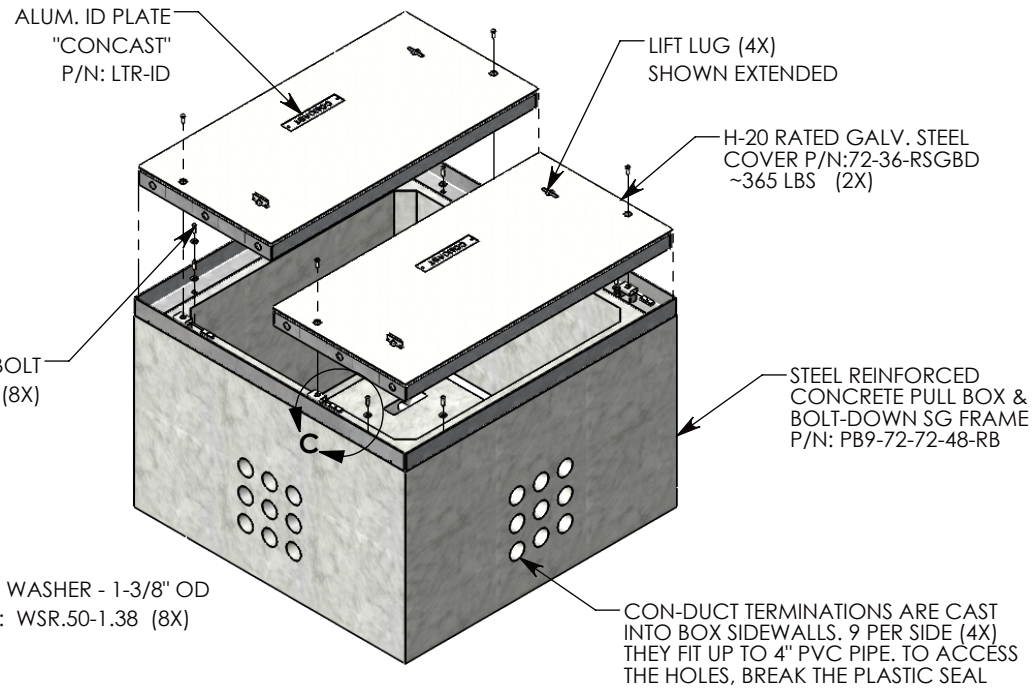

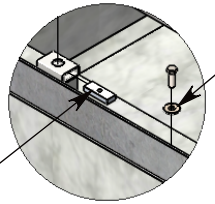

DETAIL C
SCALE 1 : 16

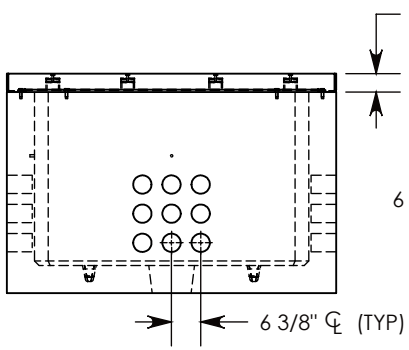

SIDE "A"

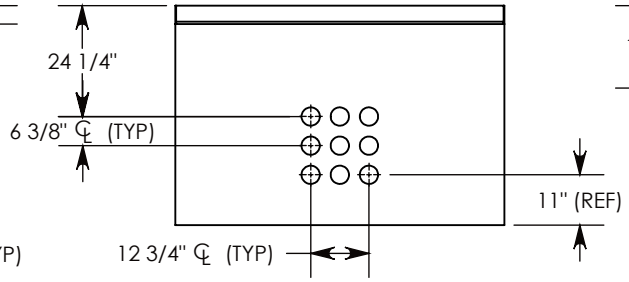

SIDE "B" (HLR)

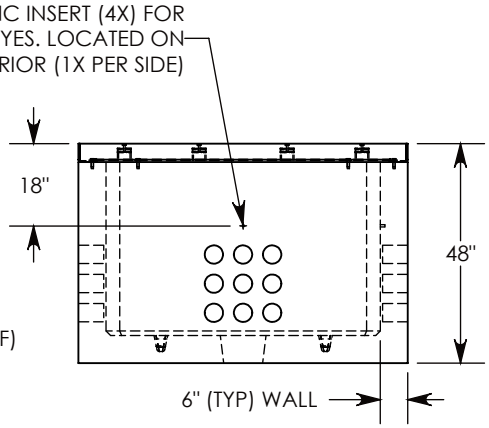

SIDE "C"

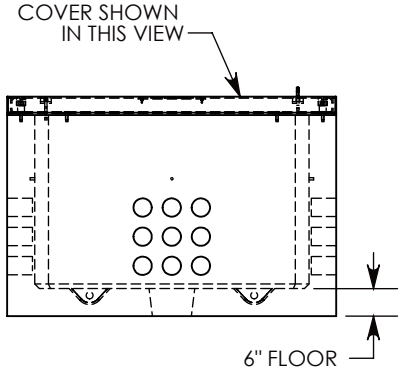

SIDE "D"

NOTE 1: FOR PVC SIZES SMALLER THAN 4", USE CONCAST RC41(REDUCING COUPLER).

H-20 RATED - 32,000 LB. PER AXLE LOAD.

DRAWN BY: ROBIN FLINT		
DATE: 10/20/2016	**REVISION LEVEL:** A	
WEIGHT: 8167 LBS. W/COVERS	**MATERIAL:** NOTED	

CONCAST
1010 NORTH STAR DRIVE
P.O. BOX 69
ZUMBROTA, MN 55992-0069

DESCRIPTION:
CONCRETE PULL BOX W/GALV. STEEL COVERS

DIMENSIONS ARE IN INCHES TOLERANCES: FRACTIONAL: ± 1/8" ANGULAR: ± 2°	CONTACT INFORMATION: EMAIL: INFO@CONCASTINC.COM PHONE: (507) 732-4095 FAX: (507) 732-4094	SHEET 1 OF 1

PART NUMBER: PB9-72-72-48-RSGBD