REV. B - SIC - 3/20/2020 - UPDATED ANNOTATIONS; UPDATED 54-40-A WEIGHT TO 88 LBS, WAS 98 LBS; UPDATED 54-40-A-CTR WEIGHT TO 92 LBS, WAS 104 LBS

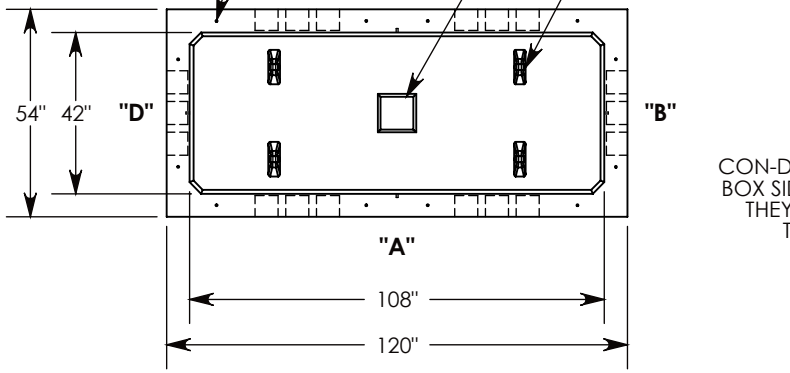

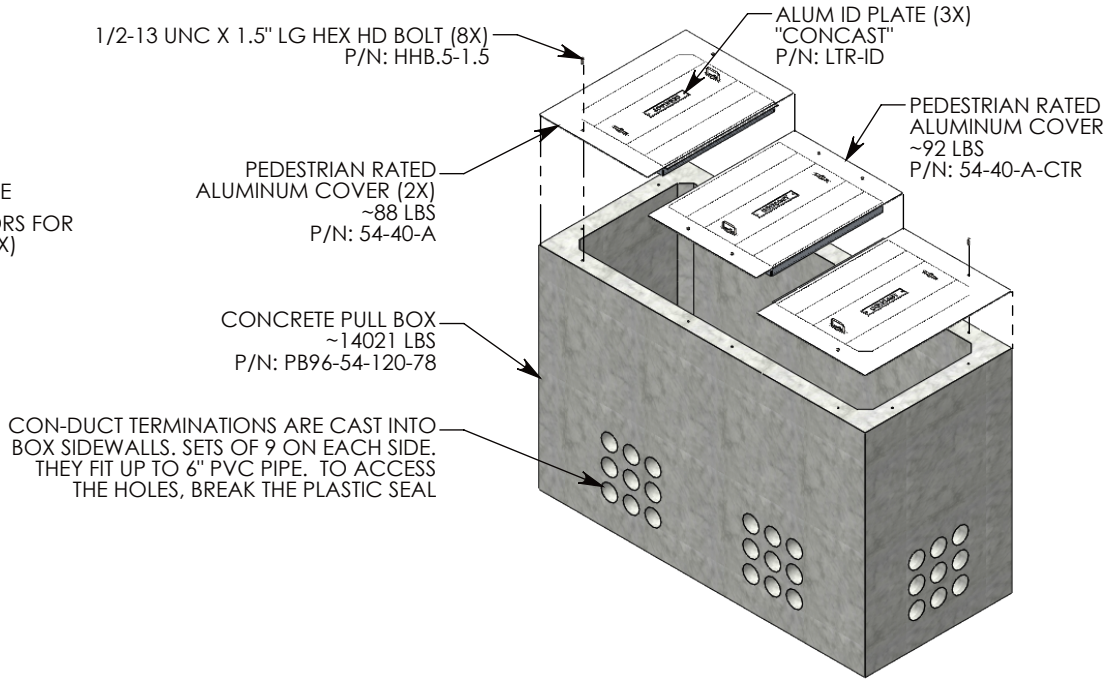

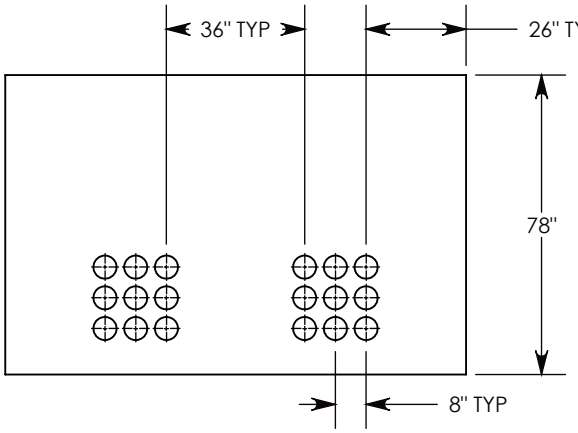

SIDE "A" (HLR)

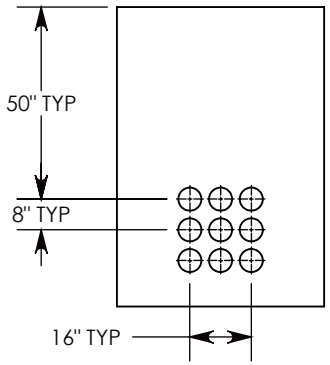

SIDE "B" (HLR)

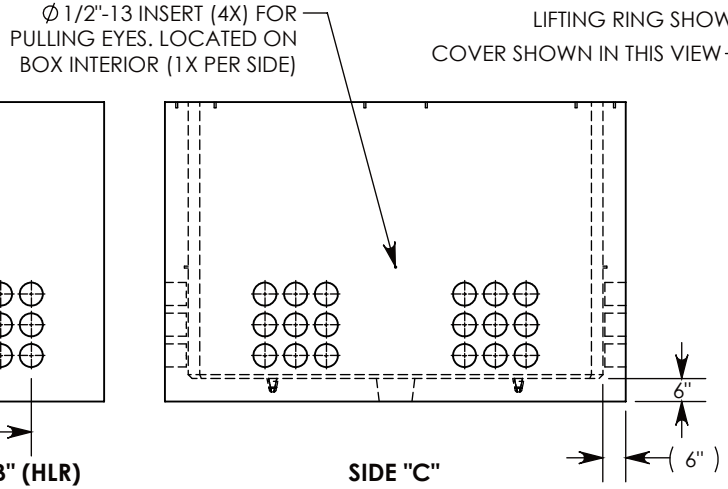

SIDE "C"

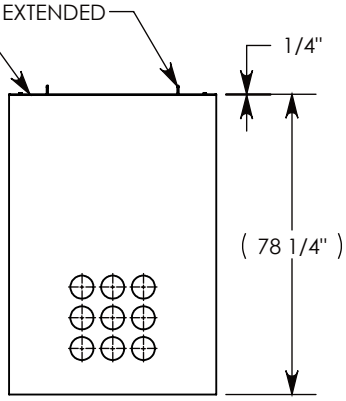

SIDE "D" (HLR)

NOTE 1: FOR ADDED SECURITY, PENTA HEAD BOLTS (P/N: PTA.5-1.5) CAN BE ADDED

PEDESTRIAN RATED - 200 LB. PER SQ. FOOT

DRAWN BY:	**MALACHI MLINAR**		
CREATED DATE:	**3/26/2010**	**REVISION LEVEL:**	**B**
SAVED DATE:	**3/20/2020**	**SAVED BY:**	**scallahan**
WEIGHT: **14290 LBS.**		**MATERIAL:** **NOTED**	

CONCAST
1010 NORTH STAR DRIVE
P.O. BOX 69
ZUMBROTA, MN 55992-0069

DESCRIPTION:
PULL BOX W/ALUMINUM COVERS

DIMENSIONS ARE IN INCHES
TOLERANCES:
FRACTIONAL: ± 1/8"
ANGULAR: ± 2°

CONTACT INFORMATION:
EMAIL: INFO@CONCASTINC.COM
PHONE: (507) 732-4095
FAX: (507) 732-4094

SHEET 1 OF 1

PART NUMBER: **PB96-54-120-78-A**