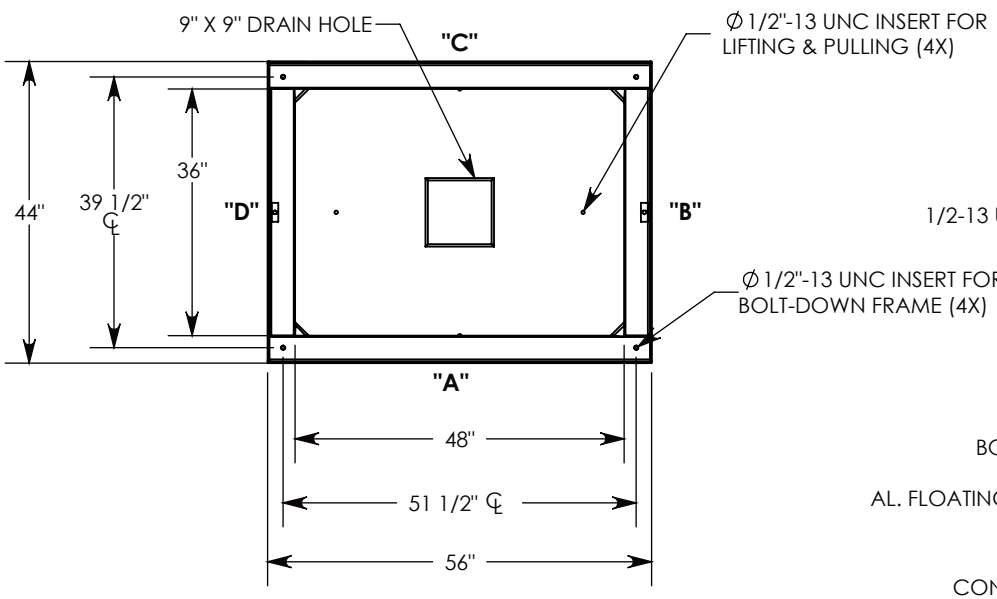

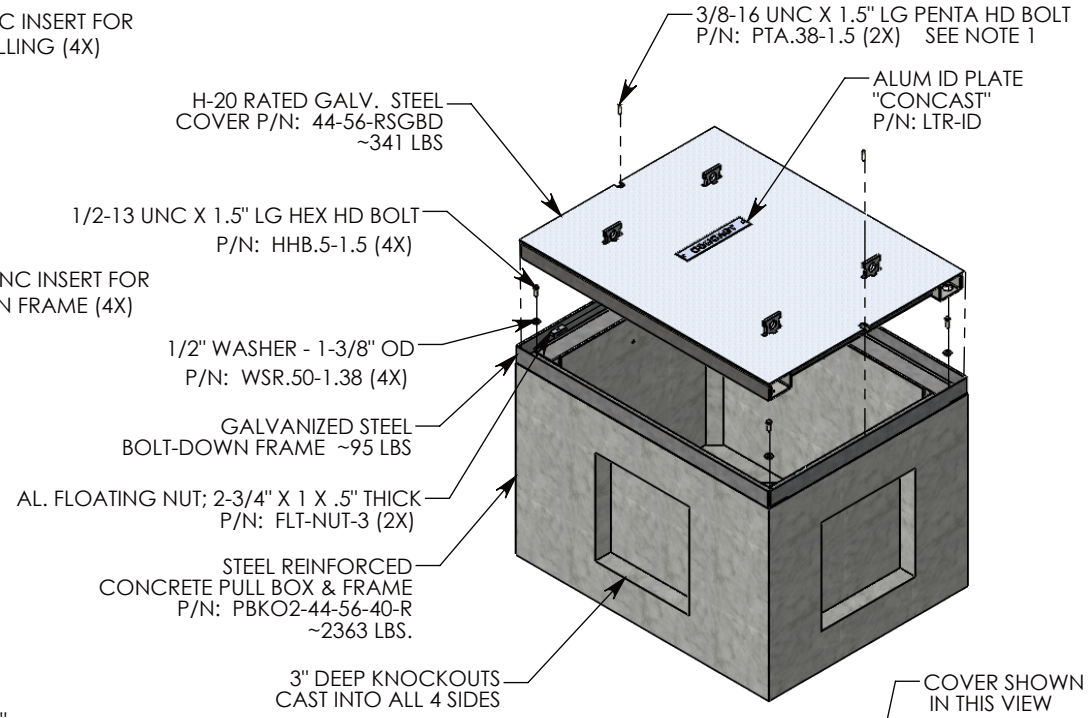

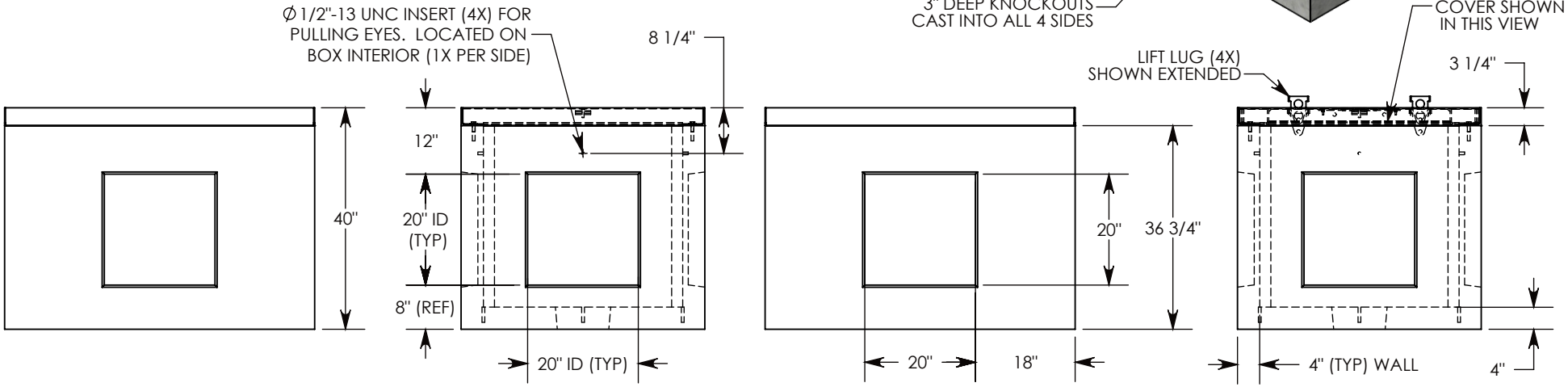

SIDE "A" (HLR) **SIDE "B"** **SIDE "C" (HLR)** **SIDE "D"**

NOTE 1: FOR ADDED SECURITY, ORDER WTIH SURELOCK BOLTS P/N: PBKO2-44-56-40-RSGBDSL

H-20 RATED - 32,000 LB. PER AXLE LOAD.

DRAWN BY: ROBIN FLINT		CONCAST 1010 NORTH STAR DRIVE P.O. BOX 69 ZUMBROTA, MN 55992-0069	**DESCRIPTION:** PULL BOX W/ GALV. STEEL BD COVER
DATE: 9/4/2016	**REVISION LEVEL:** 0		DIMENSIONS ARE IN INCHES TOLERANCES: FRACTIONAL: ± 1/8" ANGULAR: ± 2°
WEIGHT: 2822 LBS. W/COVER	**MATERIAL:** NOTED		CONTACT INFORMATION: EMAIL: INFO@CONCASTINC.COM PHONE: (507) 732-4095 FAX: (507) 732-4094
			SHEET 1 OF 1
			PART NUMBER: PBKO2-44-56-40-RSGBD