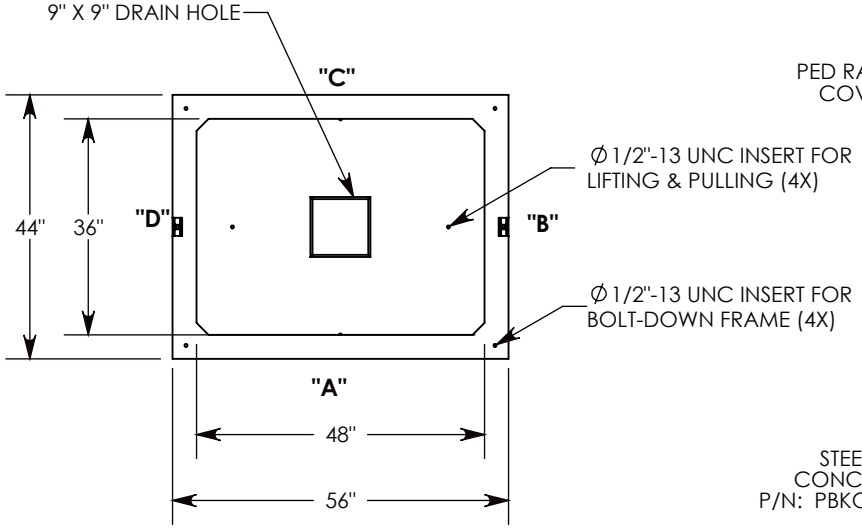

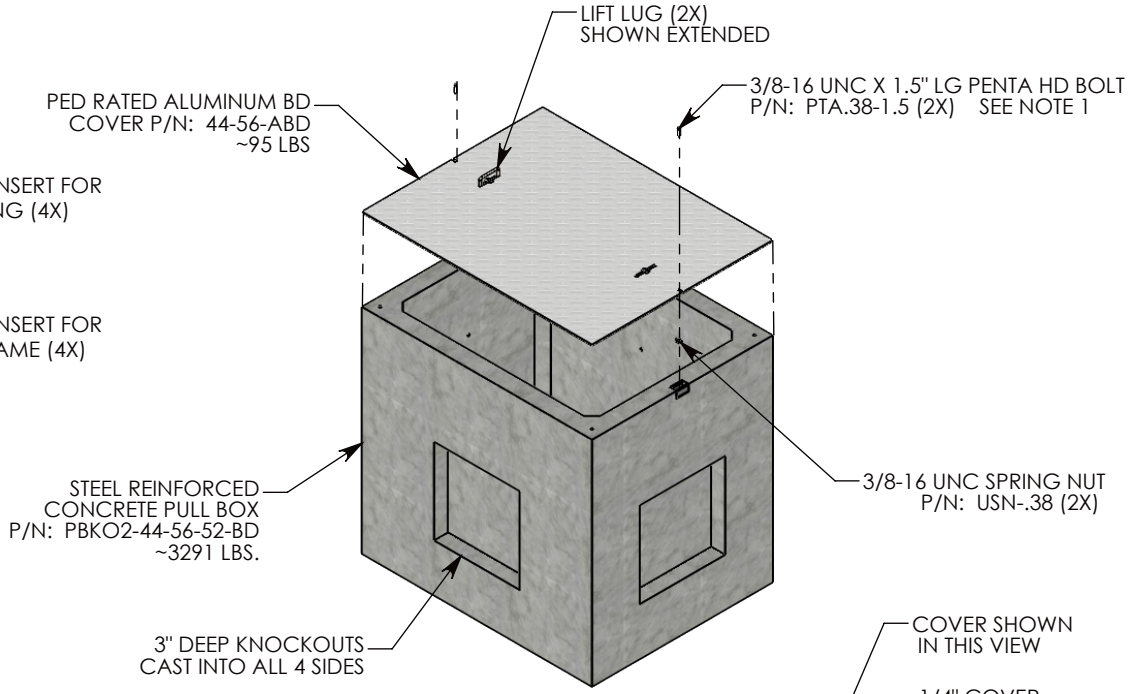

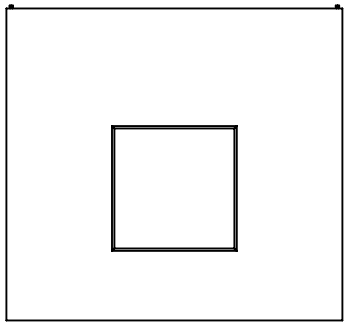

SIDE "A" (HLR)

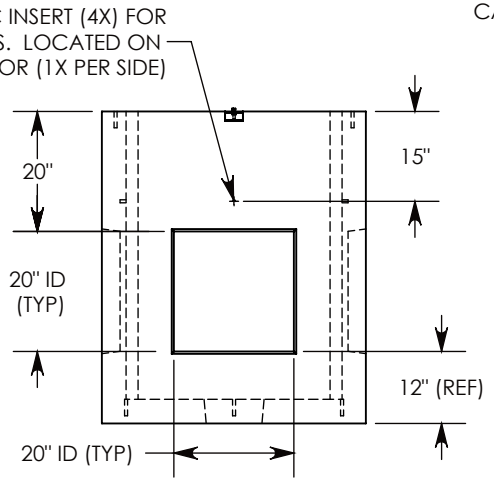

SIDE "B"

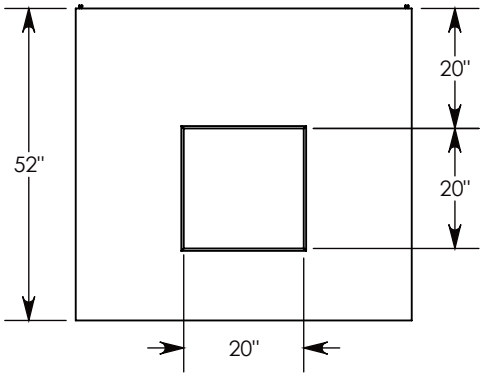

SIDE "C" (HLR)

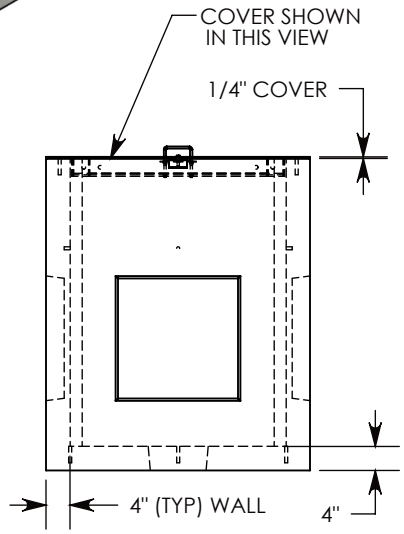

SIDE "D"

NOTE 1: FOR ADDED SECURITY, ORDER WTIH SURELOCK BOLTS P/N: PBKO2-44-56-52-ABDSL

PEDESTRIAN RATED - 200 LB. PER SQ. FOOT

DRAWN BY: ROBIN FLINT	CONCAST 1010 NORTH STAR DRIVE P.O. BOX 69 ZUMBROTA, MN 55992-0069	**DESCRIPTION:** PULL BOX W/ GALV. STEEL BD COVER
DATE: 8/21/2016 / **REVISION LEVEL:** 0		DIMENSIONS ARE IN INCHES TOLERANCES: FRACTIONAL: ± 1/8" ANGULAR: ± 2°
WEIGHT: 3387 LBS. W/COVER / **MATERIAL:** NOTED		CONTACT INFORMATION: EMAIL: INFO@CONCASTINC.COM PHONE: (507) 732-4095 FAX: (507) 732-4094
		SHEET 1 OF 1
		PART NUMBER: PBKO2-44-56-52-ABD