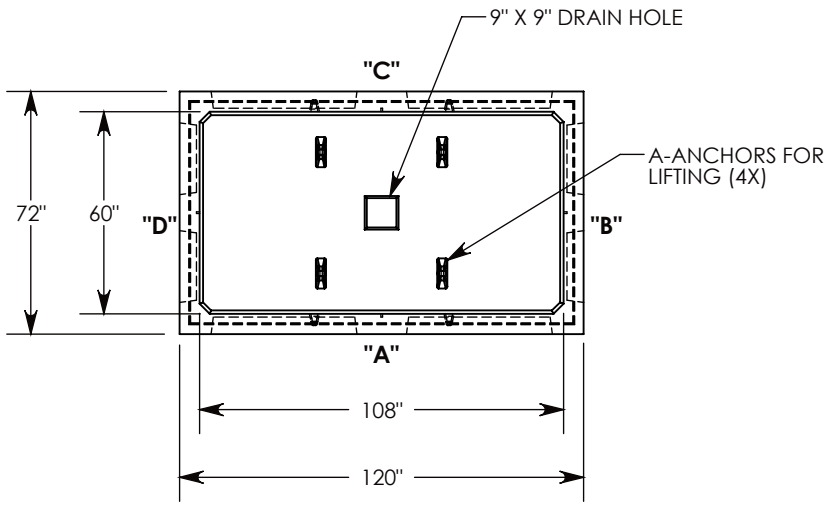

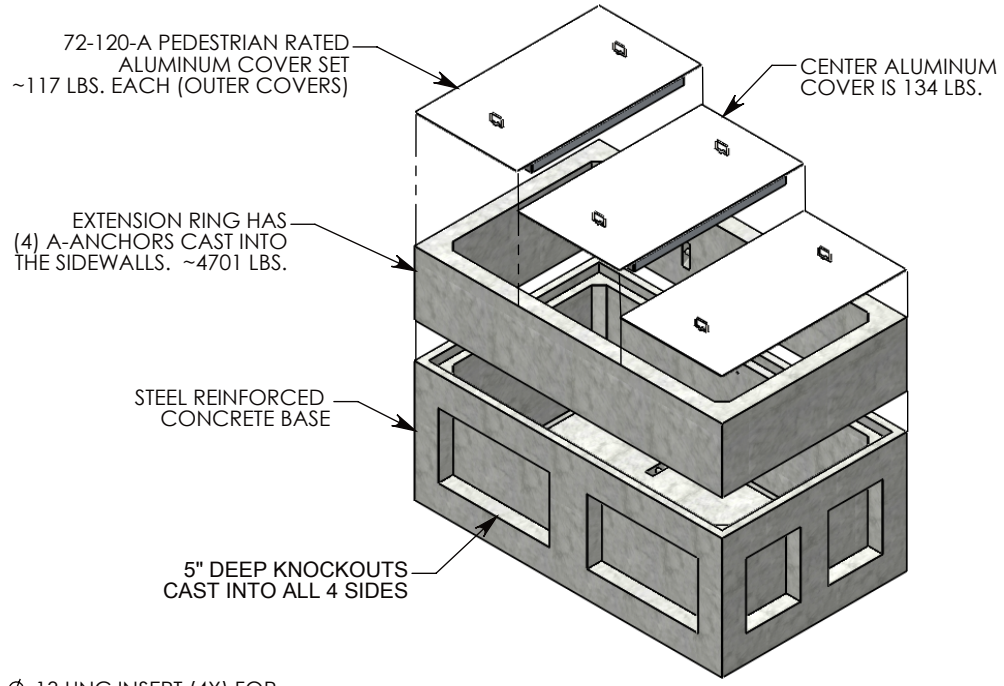

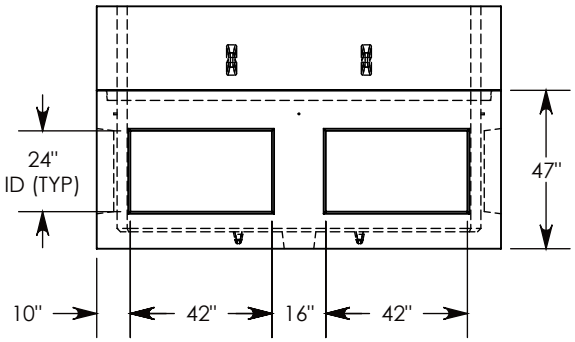

SIDE "A"

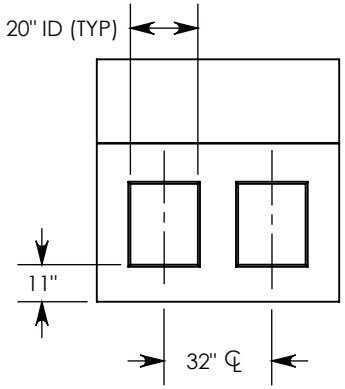

SIDE "B" (HLR)

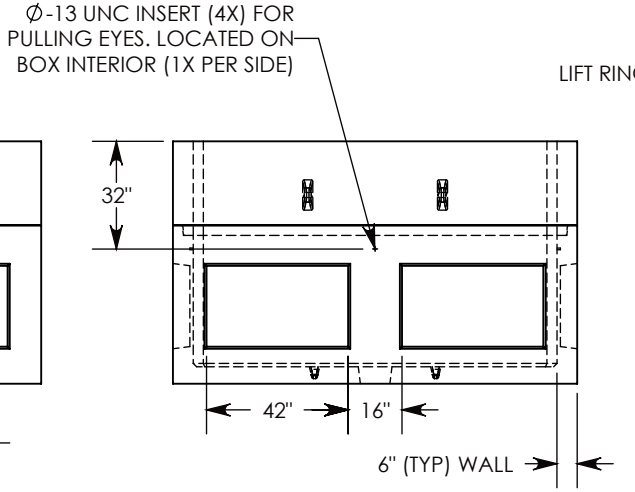

SIDE "C"

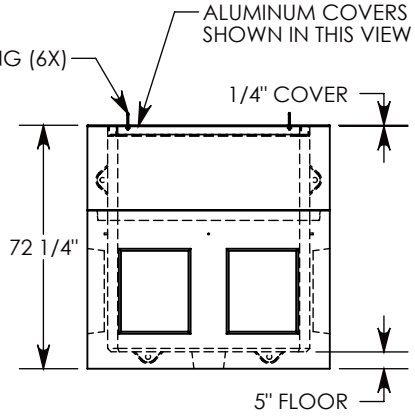

SIDE "D"

PEDESTRIAN RATED - 200 LB. PER SQ. FOOT

DRAWN BY: ROBIN FLINT	CONCAST 1010 NORTH STAR DRIVE P.O. BOX 69 ZUMBROTA, MN 55992-0069	**DESCRIPTION:** CONCRETE PULL BOX W/ALUMINUM COVERS
DATE: 6/16/2014 / **REVISION LEVEL:** 0		DIMENSIONS ARE IN INCHES TOLERANCES: FRACTIONAL: ± 1/8" ANGULAR: ± 2°
WEIGHT: 13239 LBS. W/COVERS / **MATERIAL:** NOTED		CONTACT INFORMATION: EMAIL: INFO@CONCASTINC.COM PHONE: (507) 732-4095 FAX: (507) 732-4094
		SHEET 1 OF 1
		PART NUMBER: PBKO2-72-120-72-A