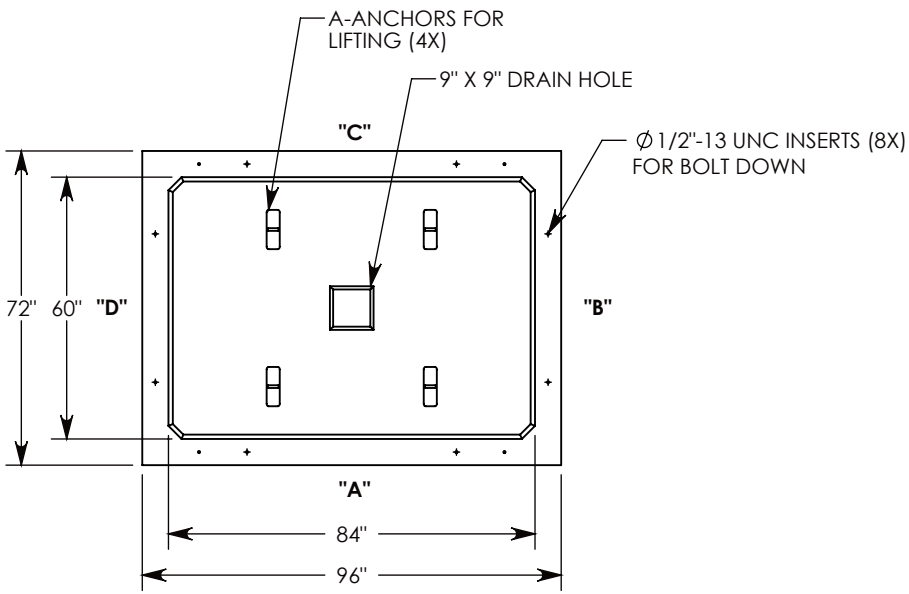

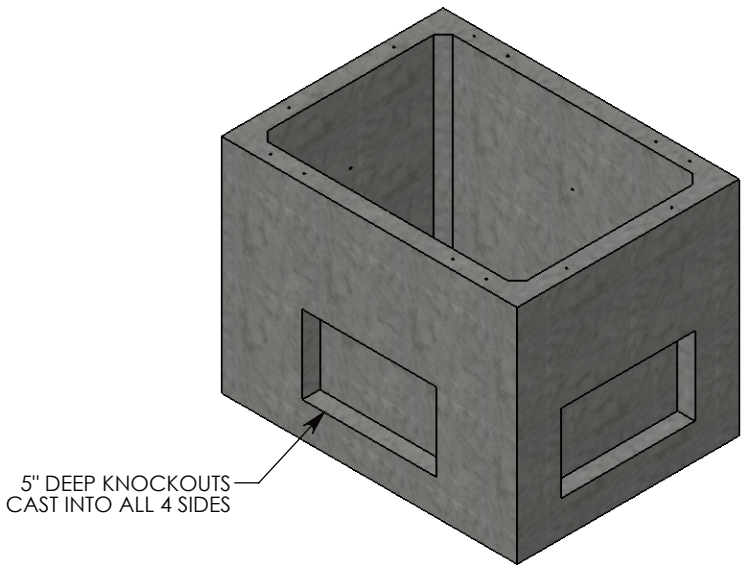

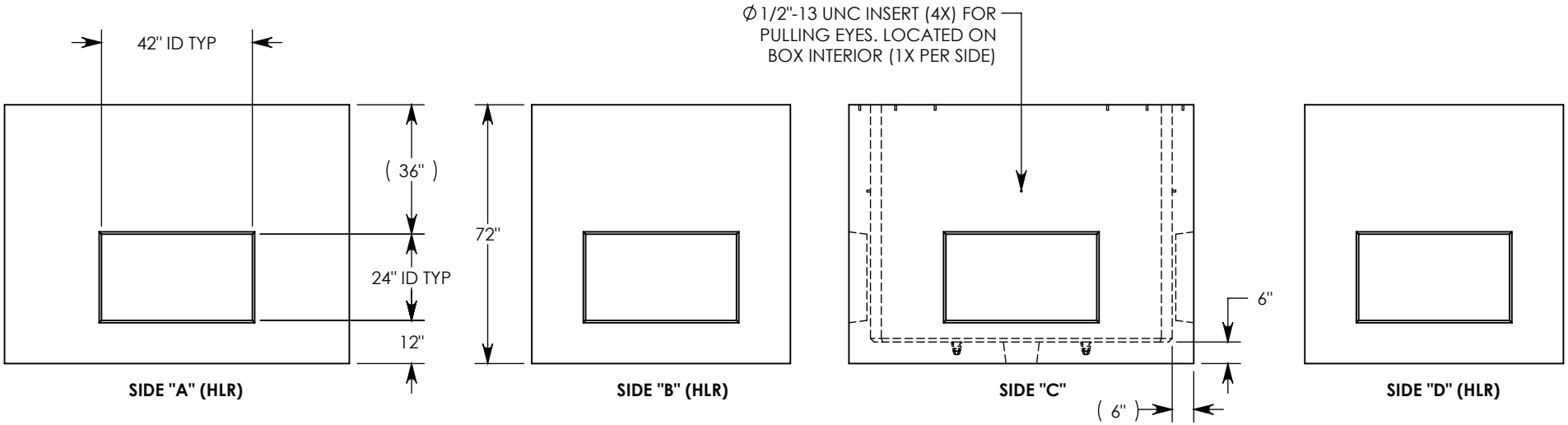

AASHTO H-20 RATED – 32,000 LB. SINGLE AXLE LOAD

DRAWN BY: **JESSE GUTTING**		
CREATED DATE: **4/8/2020**	REVISION LEVEL: **0**	
SAVED DATE: **3/11/2021**	SAVED BY: **jgutting**	
WEIGHT: **11844 LBS.**	MATERIAL: **CONCRETE**	

CONCAST
1010 NORTH STAR DRIVE
P.O. BOX 69
ZUMBROTA, MN 55992-0069

DESCRIPTION:
CONCRETE PULL BOX BASE

DIMENSIONS ARE IN INCHES TOLERANCES: FRACTIONAL: ± 1/8" ANGULAR: ± 2°	CONTACT INFORMATION: EMAIL: INFO@CONCASTINC.COM PHONE: (507) 732-4095 FAX: (507) 732-4094	SHEET 1 OF 1

PART NUMBER:
PBKO1-72-96-72